LOCKE TOWNSHIP REGULAR BOARD MEETING AGENDA MAR. 12, 2024 7 PM
LOCKE TWP HALL- 3805 BELL OAK RD, WMSTN 48895 517 468-3405

1. Call to Order, Welcome, Pledge of Allegiance
2. Additions to agenda/approval of agenda
3. Action on Feb. 13, 2024 meeting minutes
4. Public Hearing – Appropriation Act
5. Action on Accts Payable Independent Bank checks #6175 - #62___ totaling $ _____
[$32,245 State Revenue Sharing received for Nov/Dec 2023]
6. Presentation / Public Comment-3 minute limitation
Julie Rudd, Director-Williamston Area Senior Center
7. Unfinished Business:
*Quotes summary for security cameras for new ballot drop box & installation-ballot drop box
MI Twp Part Plan Risk Reduction Program grants opportunity

8. New Business:
*Budget Amendment:

101 215 702 clerk salary	$1800 increase	/	101 262 727 election supplies	$200 increase
101 215 860 clerk travel	$150 increase	/	101 262 901 election publishing	$1100 increase
101 262 702 election salary	$3700 increase	/	101 247 901 Bd of Rev publishing	650 increase
101 262 713 election Medicare	$170 increase	/	101 446 819 streets/bridges	$7770 decrease

*Resignation of Planning Commissioner Sarah Lackey / Motion to accept resignation
*Supervisor appointment of ???? to Planning Commission for remaining term ending 12-31-26
Supervisor considerations: Cory Jorgensen-BOR, Jean Coe-ZBA, Duane Pinckney
*Motion to accept Planning Commission appointment
*CD Investment information:
Huntington Bank, promotional jumbo CD, $100,000-$249,999.99, 5.00%/5.13 % APY, 215days
Independent Bank, up to $250,000, 4.65%, 7-119 days
*Res. 2024-04 General Fund Budget and General Appropriation Act fiscal yr 4-01-2024 thru 3-31-2025
*Volunteer for Bell Oak Cemetery-remove 2stumps/clean-up
*declare U. S. flag beyond repair and dispose of in Boy Scouts collection receptacle
*action- additional $70 wage for Trustee Shepler attending 3/07 Wmstn School Bd meeting
*correction on Res. 2024-03 Poverty Guidelines [pink], page 2, 7) Asset Test, ~~residents shall~~ *residents may*

9. Reports:
Clerk - SURVIVED 2024 Presidential Primary Election; Feb rev/exp report; 1 FOIA request processed
Treasurer –Feb 29 treas report; looked into CD interest rates; submitted new bank signature cards to include new deputy treas; entered into tax settlement process w/County; will meet 03/14 w/Decker Ins-review renewal policy
Trustee – Davis:
Trustee – Shepler:
Supervisor – Feb NIESA report; 3 FOIA requests processed; 3/05 attend BOR organizational meeting; 3/11 & 3/12 attend BOR
Zoning Administrator –Feb report; building permits update; completed MI Assoc of Planning Mar 6 & 7 Zoning Administrators zoom workshop

10. Public Comment [3 minute limitation]

11. Communications, seminars, etc.

*Mar 19, Consumers Energy Pipeline project Open House, Peacock Rd Family Farm 5-7pm
*MTA 2024 Educational Conference & Expo, April 22-25, Grand Traverse Resort
*MTA educational offerings in 2024: May – ABCs of ZBAs in Frankenmuth $100
June–Election Prep/Primer $100 Aug–Hot Topics Plan/Zon $100 Dec–New Officials Training $149

12. Any Other Business / Board member comments

13. Adjournment

The Township will provide necessary reasonable services to individuals with disabilities at the Board meeting upon 3 days notice in writing or by calling the Locke Township Clerk at 517 468-3405.

Dorothy G Hart, Locke Township Supervisor **Next meeting –April 09**

Deadline for submitting 2024 Township Board Candidate filing petition is April 23rd at 4 pm
Positions include: *Supervisor* *Clerk* *Treasurer* *Trustee* *Trustee*

PUBLIC COMMENT GUIDELINES

Officials will listen carefully and respectfully, while allowing for differences of opinion.

Township meetings are for the purpose of conducting Board business, part of which allows for public comment. Therefore, each person who wishes to address the Board is permitted 3 minutes to do so during the Public Comment period of the meeting.

When addressing the Board, please state your name and address. Please observe rules of common courtesy.

Comments are to be directed to the Board. This is the purpose for the Public Comment period (that the Board may hear from the public). It is not the purpose of the Public Comment period to enter into a back-and-forth dialogue between the Board and the public. It is the public's turn to speak, and the Board's turn to listen. That said, questions may be asked by the Board in order to clarify what is said.

Those who have further questions or who wish to have conversations with the Board are welcome to contact Board members at times beyond the township meetings.

The Locke Township Board greatly appreciates your willingness to weigh in on issues, concerns, solutions. Your input is important.

Feb. 13, 2024 [updated March 05, 2024] Outdoor Dropbox Security Camera summary

Z Solutions, Webberville		*information provided at Dec Twp Bd meeting*
REOLINK 4K NVR w/2 12 MP cameras	499.00	
Installation [from IT closet to network rack]	450.00	
6TB Hard Drive [60 days recording]	175.00	
	1124.	NDAA [National Defense Authorization Act] compliant?
American Video Transfer Inc, Brighton		*information provided at Dec Twp Bd meeting*
Geovision 8MP camera, back box, parts	1100.00	
Storage drive	100.00	
Travel to site	85.00	
Wires, cords, jacks, misc hardware	135.00	
Labor – engineering, install, network, training	1500.00	
	2920.	NDAA compliant, one year on site support
ADT, Novi		*information provided at Jan Twp Bd meeting*
Hanwah 2Megapixel camera		
[4 Megapixel add $215]		
Hanwah 4 Terabyte NVR in server closet		
Total Installation Price	**2380.68**	NDAA compliant
Consolidated Electrical Contractors, Lansing	**3185.80**	NDAA compliant, 90 day recording, server room install *Information provided in March Twp Bd meeting packet*

Info requested at Feb. meeting: motion activated, warranty, NDAA compliant, recording days, stand alone unit or to server

Drop box & camera to be in place by May 23, 2024 [75 days prior to Aug election]

MI Twp Participating Plan Risk Reduction Program grant opportunity - $5000 maximum award per member, per cycle-Mar 15 deadline

Michigan Township Participating Plan

RISK REDUCTION GRANT PROGRAM APPLICATION

Spring Cycle: February 1 - March 15

Fall Cycle August 1 - September 15

*****Grant applications will not be accepted before or after these dates*****

Name of Entity:

Entity Address:

Street

City *State* *Zip*

County

Entity Telephone Number:

Entity E-mail Address:

Project Manager's Name:

Phone Number *Email*

Are previously awarded grant projects completed and closed?

Complete description of project:

Include contractor/vendor itemized bids, list of the items or services to be purchased and total cost of the project.

Feel free to Attach any corresponding documents.

Total Cost of Project:

Total Amount being Requested:

Members financial participation in project (if any):

Anticipated days to complete:

Describe how this project will specifically reduce risk and exposure:

Describe measurable benefits of this project:

I Acknowledge that I have submitted the required supporting documents including, but not limited to;
vendor bids/quotes
current signed & dated resolution

Signature

Date

Corporate Office
1095A Mak-Tech Drive
Lansing, MI 48906

CONSOLIDATED ELECTRICAL CONTRACTORS
exceptional people = exceptional results

Since 1924
877.981.8800
www.conelectric.com

Mar 5, 2024

Dorothy Hart

RE: Exterior Ballot Box Security Camera

Consolidated Electrical Contractors is pleased to submit for your consideration our proposal for furnishing and installing the electrical work for the above-mentioned project.

BASIS OF ESTIMATE

1. Site visit with verbal description

Scope Includes

Exterior Ballot Box Security Camera $3,185.80

Install a POE powered security camera (see attached)

Run cat6 above drop ceiling back to data rack and terminate

Install 8TB hard drave for storage

Install POE networking machine for power

Power, test, commission and train customer on how to use

NOTES-

- Permit, if necessary, not included
- CEC will explain and train facility on how to use Camera and system

Proposal Total: $3,185.80

Proposal is valid for 30 days, after which, at Consolidated Electrical Contractor's sole discretion, it may be withdrawn. Commodity and quoted material price increases above 2% will require additional cost above project total listed above. Progressive monthly billing schedule and terms are Net 30. Please feel free to call with any questions or comments.

Thank you for this opportunity to work with you and your company on this project.

Sincerely,

CONSOLIDATED ELECTRICAL CONTRACTORS

Dominic Doerr E.M.U Division Manager **517.414.2474**
exceptional people = exceptional results
Corporate Office | 1095A Mak-Tech Dr. | Lansing, MI 48906
Lansing | Grand Rapids | Traverse City | Flint
877.981.8800 www.conelectric.com

VIVOTEK
A Delta Group Company

C SERIES

FD9388-HTV

Fixed Dome Network Camera

5MP • SNV • WDR Pro • Smart IR • 30M IR • Smart Stream III • IP66 • IK10

- H.265 Compression Technology
- 20 fps @ 2560x1920 (WDR Pro on)
- 2.8~12 mm, Remote Focus
- SNV (Supreme Night Visibility) for Low Light Conditions
- WDR Pro for Unparalleled Visibility in Extremely Bright and Dark Environments
- Smart Stream III to Optimize Bandwidth Efficiency
- Built-in IR Illuminators, Effective up to 30 Meters
- Trend Micro IoT Security
- Weather-proof IP66-rated and Vandal-proof IK10-rated Housing
- Built-in MicroSD/SDHC/SDXC Card Slot for On-board Storage
- Built-in Microphone

NDAA Compliance TREND MICRO aws qualified device Stratocast™

Technical Specifications

System Information

Model	FD9388-HTV
CPU	Multimedia SoC (System-on-Chip)
Flash	128 MB
RAM	512 MB

Camera Features

Image Sensor	1/2.7" Progressive CMOS
Max. Resolution	2560x1920 (5MP)
Lens Type	Motorized, Vari-focal, Remote Focus
Focal Length	f = 2.8 ~ 12 mm
Aperture	F1.4 ~ F2.8
Iris Type	Fixed iris
Field of View	90° ~ 30° (Horizontal) 65° ~ 23° (Vertical) 115° ~ 38°(Diagonal)
Shutter Time	1/5 sec. to 1/32,000 sec.
WDR Technology	WDR Pro
Day/Night	Yes
Removable IR-cut Filter	Yes
IR Illuminators	Built-in IR illuminators, effective up to 30 meters with Smart IR, IR LED*2
Minimum Illumination	0.035 lux @ F1.4 (Color) <0.005 lux @ F1.4 (B/W) 0 lux with IR illumination on
Pan Range	353°
Tilt Range	75°
Rotation Range	350°
Pan/Tilt/Zoom Functionalities	ePTZ: 48x digital zoom (4x on IE plug-in, 12x built-in)
Storage	Seamless Recording to MicroSD/SDHC/SDXC card and recording to network-attached storage (NAS)
Built-in Installation Aids	Remote focus, remote zoom

Video

Video Compression	H.265, H.264, MJPEG
Maximum Frame Rate	20 fps @ 2560x1920
Maximum Streams	3 video streams (Up to 8 configurable profiles)
S/N Ratio	61 dB
Dynamic Range	120 dB
Video Streaming	Adjustable resolution, quality and constant bit rate control, Smart Stream III
Image Settings	General settings: video title and time stamp overlay, video orientation (flip, mirror, rotation), day/night settings; Illuminators: illuminators, anti-overexposure; Image settings: white balance, image adjustment (brightness, contrast, saturation, sharpness, gamma curve), defog, 3DNR; Exposure: BLC, HLC, exposure control (exposure level, exposure time, gain control), AE speed adjustment, WDR; Privacy mask: Scheduled profile settings

Audio

Audio Capability	One-way Audio
Audio Compression	G.711, G.726
Audio Interface	Built-in microphone
Effective Range	5 meters

Network

Users	Live viewing for up to 10 clients
Security	Access list, digest authentication, HTTPS, IEEE 802.1x, password protection, Trend Micro IoT Security (brute force attack event, cyberattack event, quarantine event), user access log, user account management

Protocols	802.1X, ARP, Bonjour, CIFS/SMB, DDNS, DHCP, DNS, FTP, HTTP, HTTPS, ICMP, IGMPv3, IPv4, IPv6, NTP, PPPoE, QoS (CoS/DSCP), RTSP/RTP/RTCP, SMTP, SNMP, SSL, TCP/IP, TLS 1.2, UDP, UPnP
Interface	10 Base-T/100 Base-TX Ethernet (RJ-45) *It is highly recommended to use standard CAT5e & CAT6 cables which are compliant with the 3P/ETL standard.
ONVIF	Profile G, S, T supported, specification available at www.onvif.org

Solution Integration

Video Motion Detection	Five-window video motion detection
VADP Package	Stratocast, Trend Micro IoT Security (1-year free trial), VIVOCloud

Alarm and Event

Event Trigger	Audio detection, camera tampering detection, cybersecurity events (brute force attack event, cyberattack event, quarantine event), manual trigger, motion detection, periodical trigger, recording notification, SD card life expectancy, system boot
Event Action	Event notification via email, HTTP, FTP, NAS server, SD card, push notification File upload via email, HTTP, FTP, NAS server, SD card

General

Connectors	RJ-45 cable connector for 10/100Mpbs Network/PoE connection
LED Indicator	System power and status indicator
Power Input	IEEE 802.3af PoE Class 0
Power Consumption	Max. 12.95 W/9 W (IR on/off)
Dimensions	ø 133.7 x 103.8 mm
Weight	819 g
Certifications	EMC: CE (EN 55032 Class B, EN 55024), FCC (FCC Part 15 Subpart B Class B), RCM (AS/NZS CISPR 32 Class B), VCCI (VCCI-CISPR 32 Class B); Safety: UL (UL 62368-1), CB (IEC/EN 62368-1, IEC/EN 60950-22, IEC/EN 62471); Environment: IK10 (IEC 62262), IP66 (IEC 60529); IA: BIS (IS 13252)
Operating Temperature	Starting Temperature:-10°C ~ 60°C (14°F ~ 140°F) Working Temperature: -30°C ~ 60°C (-22°F ~ 140°F)
Humidity	90%

System Requirements

Operating System	Microsoft Windows 10/8/7 Mac 10.12 (Chrome only)
Web Browser	Chrome 58.0 or above Internet Explorer 10/11
Other Players	VLC: 1.1.11 or above

Included Accessories

Packing Contents	Quick installation guide, alignment sticker, screw pack, cable gland

Dimensions

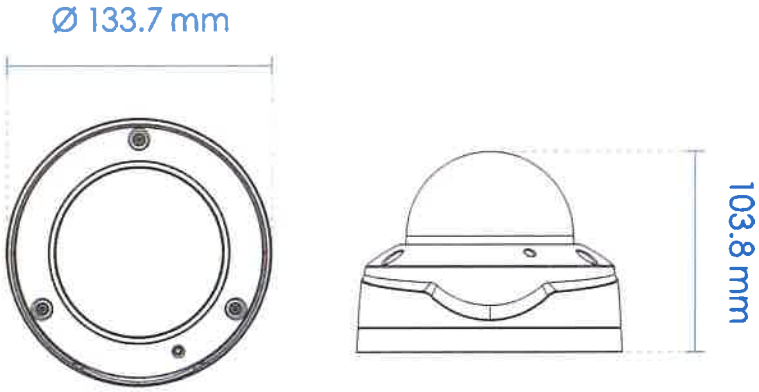

Compatible Accessories

Kits de montage

AM-21A (V02)
Montage en L

Kits de montage

AM-51D
Plaque d'adaptation

Kits de montage

AM-528
Adaptateur de montage

Kits de montage

AM-71B
Boîtier de connexion étanche

VIVOTEK

2/25/2024

RE: Locke Township Planning Commission Chairman and Secretary Position

Dorothy,

Please accept this letter as my formal resignation from the Locke Township Planning Commission. In November, we spoke about tentatively renewing my appointment with the knowledge that there could be conflicts with other commitments through my family, our business and non-profits where I serve as chair or hold board membership. Unfortunately, the number of conflict dates have grown and I do not feel it fair to the township or community to continue my role with excessive absences. In January, our business was held in Detroit later than expected and I was unable to attend. In March, I am traveling with a mission to Kenya, Africa. In April, I will be executing a convention for a non-profit in Indianapolis, and in June we have a family obligation in Texas.

This decision was not made lightly, and my hope is to possibly serve at a later date if the need arises. I appreciate the opportunity I had to serve. It was truly and honor to represent my community.

Thank you for understanding,

Sarah Lackey

Huntington Bank

Rates apply to new accounts. For existing accounts, review the account detail to see the current rate.

Promotional Jumbo CD

Rates for Postal Code 48895, RR13 - EAST MICHIGAN

Term (Days)	$1.00 - $ 99,999.99 Interest Rate/APY*	$100,000.00 - $ 249,999.99 Interest Rate/APY*	$250,000.00 - $ 1,999,999.99 Interest Rate/APY*	$2,000,000.00 - $ 99,999,999,999.99 Interest Rate/APY*
215 days	5.00% / 5.13 %	5.00% / 5.13 %	5.00% / 5.13 %	5.00% / 5.13 %
335 days	4.75% / 4.86 %	4.75% / 4.86 %	4.75% / 4.86 %	4.75% / 4.86 %

MINIMUM BALANCE TO OPEN AND OBTAIN ANNUAL PERCENTAGE YIELD (APY) FOR HUNTINGTON JUMBO CERTIFICATE OF DEPOSIT IS $100,000. RATES AND APY'S ARE ACCURATE AS OF THE DATE REFERENCED AT THE TOP OF THIS DOCUMENT AND ARE SUBJECT TO CHANGE WITHOUT NOTICE. A PENALTY WILL BE IMPOSED FOR EARLY WITHDRAWAL. WE RESERVE THE RIGHT TO LIMIT THE NUMBER OF ACCOUNTS PER CUSTOMER ABOVE $2 MILLION. NO RATE EXCEPTIONS. NOT AVAILABLE FOR BROKERS/AGENTS/PUBLIC FUNDS/FINANCIAL INSTITUTIONS. MEMBER FDIC.

Please note that when you apply online, your interest rates and APY will be determined based on your zip code. If you are an existing Huntington customer with an address outside of our seven-state footprint, your interest rates and APY will be determined based on a Columbus, Ohio, regional zip code.

FDIC DEPOSIT INSURANCE

Since 1933, the FDIC seal has symbolized the safety and security of our nation's financial institutions. FDIC deposit insurance enables consumers to confidently place their money at thousands of FDIC-insured banks across the country, and is backed by the full faith and credit of the United States government.

FDIC deposit insurance coverage depends on two things: (1) whether your chosen financial product is a deposit product; and (2) whether your bank is FDIC-insured.

THE FDIC COVERS

- Checking accounts
- Negotiable Order of Withdrawal (NOW) accounts
- Savings accounts
- Money Market Deposit Accounts (MMDAs)
- Time deposits such as certificates of deposit (CDs)
- Cashier's checks, money orders, and other official items issued by a bank

THE FDIC DOES NOT COVER

- Stock investments
- Bond investments
- Mutual funds
- Life insurance policies
- Annuities
- Municipal securities
- Safe deposit boxes or their contents
- U.S. Treasury bills, bonds or notes

Depositors do not need to apply for FDIC insurance. Coverage is automatic whenever a deposit account is opened at an FDIC-insured bank or financial institution. If you are interested in FDIC deposit insurance coverage, simply make sure you are placing your funds in a deposit product at the bank.

COVERAGE LIMITS

The standard insurance amount is $250,000 per depositor, per insured bank, for each account ownership category.

The FDIC provides separate coverage for deposits held in different account ownership categories. Depositors may qualify for coverage over $250,000 if they have funds in different ownership categories and all FDIC requirements are met.

All deposits that an accountholder has in the same ownership category at the same bank are added together and insured up to the standard insurance amount.

FDIC DEPOSIT INSURANCE COVERAGE LIMITS BY ACCOUNT OWNERSHIP CATEGORY

SINGLE ACCOUNTS OWNED BY ONE PERSON	$250,00 PER OWN
JOINT ACCOUNTS OWNED BY TWO OR MORE PERSONS	[illegible]
CERTAIN RETIREMENT ACCOUNTS INCLUDES IRAS	$250,00 PER OWN
REVOCABLE TRUST ACCOUNTS	$250,00 PER OWNER PER UNIQUE BENEFICIARY
CORPORATION, PARTNERSHIP AND UNINCORPORATED ASSOCIATION ACCOUNTS	$250,00 PER CORPORATION, PARTNERSHIP OR UNINCORPORATED ASSOCIATION
IRREVOCABLE TRUST ACCOUNTS	$250,00 FOR THE NONCONTINGENT INTEREST OF EACH BENEFICIARY
EMPLOYEE BENEFIT PLAN ACCOUNTS	$250,00 FOR THE NONCONTINGENT INTEREST OF EACH PLAN PARTICIPANT
GOVERNMENT ACCOUNTS	$250,00 PER OFFICIAL CUSTODIAN (MORE COVERAGE AVAILABLE SUBJECT TO SPECIFIC CRITERIA)

WHEN A BANK FAILS

A bank failure is the closing of a bank by a federal or state banking regulatory agency, generally resulting from a bank's inability to meet its obligations to depositors and others. In the unlikely event of a bank failure, the FDIC acts quickly to ensure depositors get prompt access to their insured deposits.

FDIC deposit insurance covers the balance of each depositor's account, dollar-for-dollar, up to the insurance limit, including principal and any accrued interest through the date of the insured bank's closing.

The FDIC acts in two capacities following a bank failure:

1. As the "Insurer" of the bank's deposits, the FDIC pays deposit insurance to the depositors up to the insurance limit.
2. As the "Receiver" of the failed bank, the FDIC assumes the task of collecting and selling the assets of the failed bank and settling its debts, including claims for deposits in excess of the insured limit.

100,000 @ 31 days = [redacted]
200,000 @ 31 days = [redacted]

Be Independent BANK

Week of February 12, 2024

Account Type	Interest Rate	Insurance Coverage	Misc.
FLEX Account ($0-$99,999.99)	0.40%	Up to $250,000	
FLEX Account ($100,000-$249,999.99)	1.15%	Up to $250,000	
FLEX Account ($250,000-$499,999.99)	1.85%	Up to $250,000	
FLEX Account ($500,000-$999,999.99)	2.45%	Up to $250,000	
FLEX Account ($1,000,000-$2,499,999.99)	3.05%	Up to $250,000	
FLEX Account ($2,500,000+)	3.70%	Up to $250,000	
CD 7 – 31 Days	4.65%	Up to $250,000	$100,000 minimum balance, Non-compounding, interest paid at maturity, penalty for early withdrawal
CD 32 – 89 Days	4.65%	Up to $250,000	
CD 90 – 119 Days	4.65%	Up to $250,000	
CD 120 – 149 Days	4.60%	Up to $250,000	
CD 150 – 179 Days	4.55%	Up to $250,000	
CD 180 – 269 Days	4.50%	Up to $250,000	
CD 270 – 359 Days	4.35%	Up to $250,000	
CD 360 Days	4.35%	Up to $250,000	
CD 18 months	4.15%	Up to $250,000	
CD 24 months	3.94%	Up to $250,000	
ICS (0-$499,999.99)	0.95%	Fully Insured	
ICS ($500,000-$999,999.99)	1.75%	Fully Insured	
ICS ($1,000,000-$2,499,999.99)	2.70%	Fully Insured	
ICS ($2,500,000+)	3.75%	Fully Insured	
CDARS 4 Weeks	4.40%	Fully Insured	
CDARS 13 Weeks	4.40%	Fully Insured	
CDARS 26 Weeks	4.25%	Fully Insured	
CDARS 52 Weeks	4.10%	Fully Insured	
CDARS 2 Years	3.64%	Fully Insured	
CDARS 3 Years	3.45%	Fully Insured	
CDARS 5 Years	3.10%	Fully Insured	

Treasury Management/Commercial Banking

Chelsey Carpenter, Central MI ***269.986.2286***
Steve Hallead, West MI ***616.540.7721***
Hunter McGinnis, Thumb and Bay ***248.743.4051***
Whitney Swanson, Southeast MI ***248.275.8965***
Alex Wood, Northern MI ***231.499.4297***

Contact your local officer for more information on all accounts, including CDARS and ICS.

TOWNSHIP OF LOCKE, INGHAM COUNTY, MICHIGAN
RESOLUTION 2024-04 RE: GENERAL FUND BUDGET AND GENERAL APPROPRIATION ACT
FOR FISCAL YEAR 04-01-24 THRU 03-31-25

A Resolution to establish a General Appropriations Act for Locke Township; to define the powers and duties of the Locke Township officers in relation to the administration of the budget; and to provide remedies for refusal or neglect to comply with the requirements of this Resolution.

The Board of Trustees of Locke Township resolves:

Section 1: Title This Resolution shall be known as the Locke Township General Appropriations Act.

Section 2: Chief Administrative Officer The Supervisor shall be the Chief Administrative Officer and shall perform the duties of the Chief Administrative Officer enumerated in this Act.

Section 3: Fiscal Officer The Clerk shall be the Fiscal Officer and shall perform the duties of the Fiscal Officer enumerated in this Act.

Section 4: Public Hearing on the Budget Pursuant to MCLA 141.412, notice of a public hearing on the proposed budget was published in The Fowlerville News and Views, a newspaper of general circulation, on February 25, 2024, and a public hearing on the proposed budget was held on March 12, 2024.

Section 5: Estimated Revenues Estimated Township general fund revenues for fiscal year 2024-2025, including millage and various miscellaneous revenue, shall total $384062.

		ARPA Grant [transfer from Huntington]	00
PROPERTY TAXES	94000	METRO ACT R-O-W FEE	6700
TAX ADM FEE	36000	REVENUE SHARING	199662
BUILDING & TRADES PERMITS	12000	CEMETERY BURIAL	10000
ZONING PERMITS	2000	SALE OF CEMETERY LOTS	3000
SUMMER TAX COLLECT FEE	2700	INTEREST	8000
ELECTION REIMBURSEMENT	5000	HALL RENTAL	5000

Section 6: Millage Levy The Locke Township Board shall cause to be levied and collected the general property tax on all real and personal property within the township upon the current tax roll an amount equal to 1 mill as set forth by the Tax Allocation Board, reduced if and as necessary to comply with constitutional tax limitation.

Section 7: Estimated Expenditures Estimated township general fund expenditures for fiscal year 2024-2025 for the various Township activities total $438965.

101 TOWNSHIP BOARD	24310	302 HAZMAT APPROP	500
171 SUPERVISOR	23491	371 CONTRACT INSPECTOR	10000
215 CLERK	47562	445 DRAINS	10000
247 BOARD OF REVIEW	1780	446 HIGHWAYS/STS/BRIDGES	93000
253 TREASURER	37047	567 CEMETERY	54415
257 ASSESSOR	25500	701 PLANNING	34300
262 ELECTION	24100	702 ZONING	14690
265 BUILDING/GROUNDS	38270		

Section 8: Adoption of Budget by Activity/Department Locke Township Board adopts the 2024-2025 fiscal year general fund budget by Activity/Department, with revenues and activity expenditures as indicated in Section 5 and 7 of this Act. Township officials responsible for the expenditures authorized in the budget may expend Township funds up to, but not to exceed, the total appropriation authorized for each Activity/Department. The account numbers, organization, summaries and headings may be adjusted by the Fiscal Officer to comply with state law and proper accounting standards.

Section 9: Budget Monitoring Whenever it appears to the Chief Administrative Officer, the Fiscal Officer or the Township Board that the actual and probable revenues in any fund will be less than the estimated revenues upon which appropriations from such fund were based, and when it appears that expenditures shall exceed an appropriation, the Chief Administrative Officer or Fiscal Officer shall present to the Township Board recommendations to prevent expenditures from exceeding available revenues or appropriations for the current fiscal year. Such recommendations shall include proposals for reducing appropriations, increasing revenues, or both.

Section 10: Authorized Salary, Hourly and Per Diem Rates
Included in the various Activities/Departments are amounts of the salary, hourly and per diem rates for the officials and employees of the Township as follows:

SUPERVISOR	19641.	BOARD OF REVIEW	17. HR (min. 2 hrs)
CLERK	39302.	ELECTION INSPECTOR	16. HR / ELECTION CHAIR 25. extra
TREASURER	28987.	NIESA REP	80. PER MO. MEETING
TRUSTEE	170. per twp bd meeting, 80. per additional meeting/35. virtual when approved by the Board		
PLAN COMM	150. per meeting (chair/member sec 25. additional, non-member recording sec 60. per meeting)		
ZBA/CONST BD OF APPEALS	150. per meeting (chair/member sec 25. additional, non-member recording sec 60. per meeting)		
DEPUTIES / CEMETERY CARETAKER / HALL MAINTENANCE	17. per hr (min 2 hrs)		
ORDINANCE ENFORCEMENT OFFICER	20. per hr (min 2 hrs)		

Section 11: Appropriation not a Mandate to Spend Appropriations shall be deemed maximum authorizations to incur expenditures. The Fiscal Officer shall monitor and control the budget to ensure that expenditures are within appropriations, and shall not issue any Township order for expenditures that exceed appropriations.

Section 12: Periodic Fiscal Reports The Fiscal Officer shall transmit to the Township monthly, a report of financial operations, including, but not limited to:

a. summary statement of the actual financial condition of the general fund
b. summary statement showing the receipts and expenditures and encumbrances.

Section 13: Limit on Obligations and Payments
No obligation shall be incurred against, and no payment shall be made from any appropriation account unless there is a sufficient unencumbered balance in the appropriation and sufficient funds are or will be available to meet the obligation.

Section 14: Authorization of Payments
The Fiscal Officer may issue and deliver checks drawn on the Township funds for payroll, utility bills and other pre-approved purchases in order to take advantage of discounts or to make payment prior to a billing deadline that falls between Township Board meeting dates. Such payments shall be included on the claims list submitted to the Township Board at their next meeting, labeled prepaid. All other checks drawn on the Township general fund shall be approved by the Township Board prior to being delivered.

Section 15: Violations of This Act Any obligation incurred or payment authorized in violation of this resolution shall be void and shall subject any responsible officials to disciplinary action as outlined in Public Act 621 of 1978.

Section 16: Board Adoption
The foregoing resolution offered by board member _____, seconded by board member _____. Upon a roll call vote, the following voted:

Aye _____ _____ _____ _____ _____
Nay _____ _____ _____ _____ _____
Absent _____ _____

The resolution was declared adopted at this regular meeting held on March 12, 2024.

_____
Glenda S Turner, Locke Township Clerk

CERTIFICATION

The undersigned, Glenda S Turner, duly elected and acting Clerk of the Township of Locke, hereby certifies that the foregoing constitutes a true and complete copy of a resolution adopted by the Township Board of Locke Township on March 12, 2024 at which meeting a quorum was present; that said meeting was conducted in accordance with the Open Meetings Act of the State of Michigan and the members of said Board voted upon said Resolution as hereinbefore set forth.

_____
Attested to by Supervisor Dorothy G Hart

_____
Glenda S Turner, Locke Township Clerk

TOWNSHIP OF LOCKE
RESOLUTION #2024-03
POVERTY GUIDELINES and INCOME/ASSET TEST

WHEREAS, the adoption of guidelines for poverty exemptions, required by Section 7u of the General Property Tax Act, Public Act 206 of 1893, is within the purview of the Township Board; and

WHEREAS, the homestead of persons who, in the judgment of the Supervisor and Board of Review, by reason of poverty, are unable to contribute to the public charges is eligible for exemption in whole or part from taxation under Public Act 390, 1994 (MCL 211.7u); and

WHEREAS, pursuant to PA 390, 1994, Locke Township, Ingham County adopts the following guidelines for the Supervisor and Board of Review to implement. The guidelines shall include but not be limited to the specific income and asset levels of the claimant and all persons residing in the household, including any property tax credit returns, filed in the current or immediately preceding year. To be eligible, a person shall do all of the following on an annual basis:

1) Be an owner of and occupy as a homestead the property for which an exemption is requested.

2) File a claim with the Supervisor or Board of Review, accompanied by federal and state income tax returns for all persons residing in the homestead, including any property tax credit returns filed in the immediately preceding year or in the current year.

3) Produce a valid drivers' license or other form of identification, if requested.

4) Produce a deed, land contract or other evidence of ownership of the property, if requested.

5) Income Test: Meet the Federal Poverty Income Standards as defined and determined annually by the United States Department of Health and Human Services under the authority of 42 U.S.C. 9902(2):

Poverty (Hardship) Exemptions for 2024

size of family unit	poverty guidelines
1	$14580
2	$19720
3	$24860
4	$30000
5	$35140
6	$40280
7	$45420
8	$50560
for each additional person	$5140

6) The application for an exemption shall be filed after January 1 and before the day prior to the last day of Board of Review.

7) Asset Test: To be eligible for a 100% poverty exemption for 2024, residents ~~shall~~ *may* have a maximum of $50,000 in net assets, excluding their principal residence, retirement accounts, and accounts having a substantial penalty for withdrawals.

8) Any additional eligibility requirements as determined by the Township Board.

NOW, THEREFORE, BE IT HEREBY RESOLVED that the Board of Review shall follow the above stated policy and federal guidelines in granting or denying an exemption.

The foregoing resolution offered by Board Member Turner and seconded by Board Member Shepler.

Upon roll call vote, the following voted:
Aye: Davis Rambo Hart Shepler Turner

Nay: none

Absent: none

The Supervisor declared the resolution adopted.

Glenda S Turner
Glenda S Turner, Clerk

Dorothy G Hart
attested to by: Dorothy G Hart, Supervisor

CERTIFICATION

I hereby certify, as the duly qualified and acting Clerk of Locke Township, Ingham County, Michigan, that the foregoing constitutes a true and complete copy of a Resolution adopted at a meeting of the Locke Township Board held on February 13, 2024; that said meeting was conducted and public notice of said meeting was given pursuant to and in full compliance with the Open Meetings Act, being 1976 PA267; that a quorum of the Board was present and voted in favor of said Resolution; and that minutes of said meeting were kept and will be or have been made available as required by the Open Meetings Act.

Glenda S Turner
Clerk

REVENUE AND EXPENDITURE REPORT FOR LOCKE TOWNSHIP

PERIOD ENDING 02/29/2024

GL NUMBER	DESCRIPTION	2023-24 AMENDED BUDGET	YTD BALANCE 02/29/2024 NORMAL (ABNORMAL)	ACTIVITY FOR MONTH 02/29/2024 INCREASE (DECREASE)	AVAILABLE BALANCE NORMAL (ABNORMAL)	% BDGT USED
Fund 101 - GENERAL						
Revenues						
Dept 000						
101-000-402	PROPERTY TAXES	85,000.00	92,559.03	31,454.96	(7,559.03)	108.89
101-000-447	TAX ADMINISTRATION FEE	34,000.00	0.00	0.00	34,000.00	0.00
101-000-448	SUMMER TAX COLLECT REIMB	2,700.00	45.00	0.00	2,655.00	1.67
101-000-478	ZONING PERMITS	3,000.00	605.00	0.00	2,395.00	20.17
101-000-490	BUILDING PERMITS	10,000.00	10,876.60	295.00	(876.60)	108.77
101-000-528	OTHER GRANT FUNDS	195,500.00	0.00	0.00	195,500.00	0.00
101-000-546	METRO ACT REIMBURSEMENT	5,000.00	6,695.67	0.00	(1,695.67)	133.91
101-000-547	SET REIMBURSEMENT	0.00	0.00	0.00	0.00	0.00
101-000-548	GRANT REIMBURSEMENT	0.00	0.00	0.00	0.00	0.00
101-000-574	REVENUE SHARING	172,000.00	195,400.88	32,262.88	(23,400.88)	113.61
101-000-576	ELECTION REIMBURSEMENT	500.00	3,385.45	0.00	(2,885.45)	677.09
101-000-626	CEMETERY BURIAL	6,000.00	10,133.00	416.00	(4,133.00)	168.88
101-000-628	PLANNING COMMISSION REIMBURSE	0.00	0.00	0.00	0.00	0.00
101-000-629	ZONING REIMBURSEMENT	0.00	0.00	0.00	0.00	0.00
101-000-642	SALE OF CEMETERY LOTS	1,500.00	2,200.00	0.00	(700.00)	146.67
101-000-665	INTEREST	5,000.00	8,842.42	726.73	(3,842.42)	176.85
101-000-667	HALL RENTAL	5,500.00	4,700.00	300.00	800.00	85.45
101-000-670	LAND RENTAL	0.00	0.00	0.00	0.00	0.00
101-000-674	CONTRIBUTIONS	0.00	0.00	0.00	0.00	0.00
101-000-675	MISCELLANEOUS INCOME	0.00	277.51	0.00	(277.51)	100.00
101-000-677	ESCROW REFUND	0.00	0.00	0.00	0.00	0.00
101-000-687	INSURANCE REFUNDS	0.00	3,194.00	0.00	(3,194.00)	100.00
101-000-693	SALE OF FIXED ASSETS	0.00	0.00	0.00	0.00	0.00
Total Dept 000		525,700.00	338,914.56	65,455.57	186,785.44	64.47
TOTAL REVENUES		525,700.00	338,914.56	65,455.57	186,785.44	64.47
Expenditures						
Dept 101 - TOWNSHIP BOARD						
101-101-709	NIESA REP WAGE	960.00	880.00	80.00	80.00	91.67
101-101-710	PER DIEM	4,250.00	3,616.00	196.00	634.00	85.08
101-101-711	NON STATUTORY WAGE	400.00	0.00	0.00	400.00	0.00
101-101-712	OFFICE MANAGER WAGE	0.00	0.00	0.00	0.00	0.00
101-101-713	MEDICARE-SS	430.00	343.95	21.11	86.05	79.99
101-101-727	OFFICE SUPPLIES	2,000.00	1,520.87	148.01	479.13	76.04
101-101-818	LEGAL	13,000.00	13,684.00	0.00	(684.00)	105.26
101-101-820	AUDIT	7,600.00	7,600.00	0.00	0.00	100.00
101-101-822	TECH ADMIN/SUPPORT	3,000.00	3,343.75	535.00	(343.75)	111.46
101-101-860	TRAVEL	300.00	19.65	0.00	280.35	6.55
101-101-901	PRINTING AND PUBLISHING	500.00	908.85	0.00	(408.85)	181.77
101-101-955	MEMBERSHIPS AND DUES	1,700.00	1,751.08	0.00	(51.08)	103.00
101-101-956	WORKERS COMP INS	1,200.00	16.50	1.50	1,183.50	1.38
101-101-957	EDUCATION-TRAINING	600.00	0.00	0.00	600.00	0.00
101-101-958	MISC EXP	0.00	0.00	0.00	0.00	0.00
101-101-972	CAPITAL OUTLAY	5,000.00	0.00	0.00	5,000.00	0.00
Total Dept 101 - TOWNSHIP BOARD		40,940.00	33,684.65	981.62	7,255.35	82.28
Dept 171 - SUPERVISOR						
101-171-702	SALARY	13,044.00	11,957.00	1,087.00	1,087.00	91.67
101-171-713	MEDICARE-SS	998.00	914.77	83.16	83.23	91.66
101-171-727	OFFICE SUPPLIES	300.00	184.94	66.00	115.06	61.65

PERIOD ENDING 02/29/2024

GL NUMBER	DESCRIPTION	2023-24 AMENDED BUDGET	YTD BALANCE 02/29/2024 NORMAL (ABNORMAL)	ACTIVITY FOR MONTH 02/29/2024 INCREASE (DECREASE)	AVAILABLE BALANCE NORMAL (ABNORMAL)	% BDGT USED
Fund 101 - GENERAL						
Expenditures						
101-171-821	ACCOUNTING ASSISTANCE	200.00	0.00	0.00	200.00	0.00
101-171-860	TRAVEL	200.00	140.80	57.62	59.20	70.40
101-171-955	MEMBERSHIPS AND DUES	50.00	0.00	0.00	50.00	0.00
101-171-956	WORKERS COMP INS	0.00	224.95	20.45	(224.95)	100.00
101-171-957	EDUCATION-TRAINING	300.00	125.00	0.00	175.00	41.67
101-171-971	CAPITAL OUTLAY	500.00	0.00	0.00	500.00	0.00
Total Dept 171 - SUPERVISOR		15,592.00	13,547.46	1,314.23	2,044.54	86.89
Dept 215 - CLERK						
101-215-702	SALARY	19,932.00	20,171.00	3,361.00	(239.00)	101.20
101-215-703	DEPUTY SALARY	3,500.00	1,666.00	136.00	1,834.00	47.60
101-215-713	MEDICARE-SS	1,800.00	1,670.53	267.52	129.47	92.81
101-215-727	OFFICE SUPPLIES-POSTAGE	1,200.00	443.38	0.00	756.62	36.95
101-215-821	ACCOUNTING ASSISTANCE	200.00	79.00	0.00	121.00	39.50
101-215-850	PHONE	0.00	0.00	0.00	0.00	0.00
101-215-860	TRAVEL	300.00	0.00	0.00	300.00	0.00
101-215-955	MEMBERSHIPS AND DUES	100.00	75.00	0.00	25.00	75.00
101-215-956	WORKERS COMP INS	0.00	379.40	63.22	(379.40)	100.00
101-215-957	EDUCATION AND TRAINING	300.00	25.00	0.00	275.00	8.33
101-215-971	CAPITAL OUTLAY	500.00	0.00	0.00	500.00	0.00
Total Dept 215 - CLERK		27,832.00	24,509.31	3,827.74	3,322.69	88.06
Dept 247 - BOARD OF REVIEW						
101-247-702	SALARY	800.00	192.00	0.00	608.00	24.00
101-247-713	MEDICARE-SS	60.00	14.68	0.00	45.32	24.47
101-247-860	TRAVEL	100.00	0.00	0.00	100.00	0.00
101-247-901	PRINTING-PUBLISHING	300.00	0.00	0.00	300.00	0.00
101-247-956	WORKERS COMP INS	0.00	0.32	0.00	(0.32)	100.00
101-247-957	EDUCATION AND TRAINING	250.00	100.00	100.00	150.00	40.00
Total Dept 247 - BOARD OF REVIEW		1,510.00	307.00	100.00	1,203.00	20.33
Dept 253 - TREASURER						
101-253-702	SALARY	18,060.00	16,555.00	1,505.00	1,505.00	91.67
101-253-703	DEPUTY SALARY	1,000.00	306.00	102.00	694.00	30.60
101-253-710	PER DIEM	0.00	0.00	0.00	0.00	0.00
101-253-713	MEDICARE-SS	1,450.00	1,289.87	122.94	160.13	88.96
101-253-727	OFFICE SUPPLIES-POSTAGE	2,500.00	2,399.83	4.72	100.17	95.99
101-253-821	ACCOUNTING ASSISTANCE	300.00	79.00	0.00	221.00	26.33
101-253-850	PHONE	0.00	0.00	0.00	0.00	0.00
101-253-860	TRAVEL	600.00	554.79	0.00	45.21	92.47
101-253-956	WORKERS COMP INS	0.00	0.00	0.00	0.00	0.00
101-253-957	EDUCATION AND TRAINING	300.00	225.00	0.00	75.00	75.00
101-253-971	CAPITAL OUTLAY	500.00	0.00	0.00	500.00	0.00
Total Dept 253 - TREASURER		24,710.00	21,409.49	1,734.66	3,300.51	86.64
Dept 257 - ASSESSOR						
101-257-727	OFFICE SUPPLIES-POSTAGE	1,500.00	883.96	58.02	616.04	58.93
101-257-818	CONTRACT ASSESSING	24,000.00	18,000.00	1,800.00	6,000.00	75.00

PERIOD ENDING 02/29/2024

GL NUMBER	DESCRIPTION	2023-24 AMENDED BUDGET	YTD BALANCE 02/29/2024 NORMAL (ABNORMAL)	ACTIVITY FOR MONTH 02/29/2024 INCREASE (DECREASE)	AVAILABLE BALANCE NORMAL (ABNORMAL)	% BDGT USED
Fund 101 - GENERAL						
Expenditures						
101-257-971	CAPITAL OUTLAY	0.00	0.00	0.00	0.00	0.00
Total Dept 257 - ASSESSOR		25,500.00	18,883.96	1,858.02	6,616.04	74.05
Dept 262 - ELECTIONS						
101-262-702	SALARY	2,500.00	6,136.00	5,279.00	(3,636.00)	245.44
101-262-713	MEDICARE-SS	0.00	162.54	135.93	(162.54)	100.00
101-262-727	ELECTION SUPPLIES	1,981.00	2,078.71	227.91	(97.71)	104.93
101-262-818	ELECTION CONTRACT	0.00	0.00	0.00	0.00	0.00
101-262-860	TRAVEL	500.00	143.38	143.38	356.62	28.68
101-262-901	PRINTING-PUBLISHING	800.00	836.75	461.60	(36.75)	104.59
101-262-956	WORKERS COMP INS	0.00	0.00	0.00	0.00	0.00
101-262-971	CAPITAL OUTLAY	500.00	0.00	0.00	500.00	0.00
Total Dept 262 - ELECTIONS		6,281.00	9,357.38	6,247.82	(3,076.38)	148.98
Dept 265 - BUILDING/GROUNDS						
101-265-702	SALARY	2,500.00	1,829.00	112.00	671.00	73.16
101-265-713	MEDICARE-SS	200.00	139.92	8.56	60.08	69.96
101-265-731	MAINTENANCE SUPPLIES	2,500.00	3,038.36	325.12	(538.36)	121.53
101-265-818	BLDG/GRNDS CONTRACT	12,000.00	6,166.79	3,107.98	5,833.21	51.39
101-265-850	PHONE/INTERNET	3,500.00	3,141.76	292.24	358.24	89.76
101-265-920	UTILITIES	6,600.00	6,890.30	1,495.83	(290.30)	104.40
101-265-955	INSURANCE	9,000.00	8,284.00	0.00	716.00	92.04
101-265-956	WORKERS COMP INS	0.00	0.00	0.00	0.00	0.00
101-265-971	CAPITAL OUTLAY	6,000.00	0.00	0.00	6,000.00	0.00
Total Dept 265 - BUILDING/GROUNDS		42,300.00	29,490.13	5,341.73	12,809.87	69.72
Dept 302 - TRI COUNTY METRO APPROPRIATION						
101-302-818	TRI COUNTY METRO APPROP	0.00	0.00	0.00	0.00	0.00
101-302-823	HAZMAT APPROPRIATION	500.00	0.00	0.00	500.00	0.00
Total Dept 302 - TRI COUNTY METRO APPROPRIATION		500.00	0.00	0.00	500.00	0.00
Dept 371 - CONTRACT INSPECTOR						
101-371-818	CONTRACT INSPECTOR	10,000.00	8,460.00	160.00	1,540.00	84.60
Total Dept 371 - CONTRACT INSPECTOR		10,000.00	8,460.00	160.00	1,540.00	84.60
Dept 445 - DRAINS APPROPRIATION						
101-445-818	DRAINS/PUBLIC BENEFIT APPROP	10,000.00	7,393.37	0.00	2,606.63	73.93
Total Dept 445 - DRAINS APPROPRIATION		10,000.00	7,393.37	0.00	2,606.63	73.93
Dept 446 - HIGHWAYS/STREETS/BRIDGES						
101-446-819	HIGHWAYS/STREETS/BRIDGES	304,500.00	258,506.98	0.00	45,993.02	84.90
Total Dept 446 - HIGHWAYS/STREETS/BRIDGES		304,500.00	258,506.98	0.00	45,993.02	84.90

PERIOD ENDING 02/29/2024

GL NUMBER	DESCRIPTION	2023-24 AMENDED BUDGET	YTD BALANCE 02/29/2024 NORMAL (ABNORMAL)	ACTIVITY FOR MONTH 02/29/2024 INCREASE (DECREASE)	AVAILABLE BALANCE NORMAL (ABNORMAL)	% BDGT USED
Fund 101 - GENERAL						
Expenditures						
Dept 567 - CEMETERY						
101-567-702	SALARY-MAINTENANCE	5,000.00	7,399.14	0.00	(2,399.14)	147.98
101-567-703	SALARY-SEXTON	2,500.00	1,000.00	0.00	1,500.00	40.00
101-567-713	MEDICARE-SS	380.00	554.55	0.00	(174.55)	145.93
101-567-737	OPERATING SUPPLIES	1,000.00	1,255.97	0.00	(255.97)	125.60
101-567-818	CONTRACT GROUNDS MAINTENANCE	42,000.00	40,279.00	440.00	1,721.00	95.90
101-567-860	TRAVEL	100.00	172.62	0.00	(72.62)	172.62
101-567-955	MEMBERSHIP AND DUES	35.00	45.00	45.00	(10.00)	128.57
101-567-956	WORKERS COMP INS	0.00	0.00	0.00	0.00	0.00
101-567-971	CAPITAL OUTLAY	2,000.00	0.00	0.00	2,000.00	0.00
Total Dept 567 - CEMETERY		53,015.00	50,706.28	485.00	2,308.72	95.65
Dept 701 - PLANNING						
101-701-702	PER DIEM	5,500.00	4,455.00	0.00	1,045.00	81.00
101-701-710	PER DIEM	0.00	0.00	0.00	0.00	0.00
101-701-713	MEDICARE-SS	420.00	340.81	0.00	79.19	81.15
101-701-727	OFFICE SUPPLIES-POSTAGE	500.00	37.27	0.00	462.73	7.45
101-701-818	PROFESSIONAL SERVICES	30,000.00	1,718.35	1,718.35	28,281.65	5.73
101-701-860	TRAVEL	200.00	0.00	0.00	200.00	0.00
101-701-901	PRINTING-PUBLISHING	500.00	240.55	0.00	259.45	48.11
101-701-956	WORKERS COMP INS	0.00	0.00	0.00	0.00	0.00
101-701-957	EDUCATION	500.00	0.00	0.00	500.00	0.00
Total Dept 701 - PLANNING		37,620.00	6,791.98	1,718.35	30,828.02	18.05
Dept 702 - ZONING						
101-702-702	SALARY	10,000.00	7,920.00	720.00	2,080.00	79.20
101-702-703	DEPUTY ZONING ADM WAGE	2,000.00	0.00	0.00	2,000.00	0.00
101-702-710	PER DIEM	2,000.00	0.00	0.00	2,000.00	0.00
101-702-713	MEDICARE-SS	1,100.00	605.83	55.08	494.17	55.08
101-702-727	OFFICE SUPPLIES-POSTAGE	200.00	79.39	0.00	120.61	39.70
101-702-818	PROFESSIONAL SERVICES	5,000.00	258.75	0.00	4,741.25	5.18
101-702-901	PRINTING-PUBLISHING	300.00	0.00	0.00	300.00	0.00
101-702-956	WORKERS COMP INS	0.00	0.00	0.00	0.00	0.00
101-702-957	EDUCATION	300.00	0.00	0.00	300.00	0.00
Total Dept 702 - ZONING		20,900.00	8,863.97	775.08	12,036.03	42.41
Dept 901 - CAPITAL OUTLAY						
101-901-971	CAPITAL OUTLAY-EQUIPMENT	0.00	0.00	0.00	0.00	0.00
101-901-972	CAPITAL OUTLAY-TWP HALL	0.00	0.00	0.00	0.00	0.00
Total Dept 901 - CAPITAL OUTLAY		0.00	0.00	0.00	0.00	0.00
TOTAL EXPENDITURES		621,200.00	491,911.96	24,544.25	129,288.04	79.19
Fund 101 - GENERAL: TOTAL REVENUES		525,700.00	338,914.56	65,455.57	186,785.44	64.47

PERIOD ENDING 02/29/2024

GL NUMBER	DESCRIPTION	2023-24 AMENDED BUDGET	YTD BALANCE 02/29/2024 NORMAL (ABNORMAL)	ACTIVITY FOR MONTH 02/29/2024 INCREASE (DECREASE)	AVAILABLE BALANCE NORMAL (ABNORMAL)	% BDGT USED
Fund 101 - GENERAL						
TOTAL EXPENDITURES		621,200.00	491,911.96	24,544.25	129,288.04	79.19
NET OF REVENUES & EXPENDITURES		(95,500.00)	(152,997.40)	40,911.32	57,497.40	160.21

REVENUE AND EXPENDITURE REPORT FOR LOCKE TOWNSHIP

PERIOD ENDING 02/29/2024

GL NUMBER	DESCRIPTION	2023-24 AMENDED BUDGET	YTD BALANCE 02/29/2024 NORMAL (ABNORMAL)	ACTIVITY FOR MONTH 02/29/2024 INCREASE (DECREASE)	AVAILABLE BALANCE NORMAL (ABNORMAL)	% BDGT USED
Fund 703 - CURRENT TAX COLLECTION FUND						
Revenues						
Dept 000						
703-000-480	NSF REVENUE	0.00	0.00	0.00	0.00	0.00
703-000-481	INTEREST	0.00	859.07	854.42	(859.07)	100.00
Total Dept 000		0.00	859.07	854.42	(859.07)	100.00
TOTAL REVENUES		0.00	859.07	854.42	(859.07)	100.00
Expenditures						
Dept 000						
703-000-727	OFFICE SUPPLIES	0.00	0.00	0.00	0.00	0.00
703-000-973	MISC EXP	0.00	0.00	0.00	0.00	0.00
Total Dept 000		0.00	0.00	0.00	0.00	0.00
TOTAL EXPENDITURES		0.00	0.00	0.00	0.00	0.00
Fund 703 - CURRENT TAX COLLECTION FUND:						
TOTAL REVENUES		0.00	859.07	854.42	(859.07)	100.00
TOTAL EXPENDITURES		0.00	0.00	0.00	0.00	0.00
NET OF REVENUES & EXPENDITURES		0.00	859.07	854.42	(859.07)	100.00
TOTAL REVENUES - ALL FUNDS		525,700.00	339,773.63	66,309.99	185,926.37	64.63
TOTAL EXPENDITURES - ALL FUNDS		621,200.00	491,911.96	24,544.25	129,288.04	79.19
NET OF REVENUES & EXPENDITURES		(95,500.00)	(152,138.33)	41,765.74	56,638.33	159.31

TREASURER'S REPORT 2/29/2024

GENERAL ACCOUNT #4621	Checking	Cash Sweep	Total
Beginning Balance	$1,000.00	$519,867.84	
Deposits	$77,593.25	$64,908.96	
Interest (0.90%)		$726.73	
Withdrawals (incl. IRS)	($77,593.25)	($18,543.15)	
IRS Tax Payment	$0.00		
Ending Balance	$1,000.00	$566,960.38	**$567,960.38**

TAX ACCOUNT #4618		
Beginning Balance	$309,364.15	
Deposits (incl. interest)	$884,680.63	
Interest		
Withdrawals	($421,229.36)	
Ending Balance	$772,815.42	**$772,815.42**

HUNTINGTON #1274		
Beginning Balance		
Deposits (incl. interest)		
Interest		
Withdrawals		
Ending Balance	$0.00	$ -

Cash On Hand	$20.00	**$20.00**

GRAND TOTAL	**$1,340,795.80**

Signed Sherri L. Rambo, Treasurer

As of March 5, 2024, prior to final disbursement, the Tax Account has a balance of $83,443.69.
The figure above includes checks that have not yet cleared the bank.

95% of Taxes were collected; 5% delinquent turned over to County.

NIESA report February 2024

Thurs Feb 01	3 calls-medical: 1 Leroy, 1 Vlg-fire alarm, 1 Wmstown
Fri Feb 02	7 calls-medical: 3 Vlg, 1 Leroy-vehicle accident, 1 Whtfld, 1 Wmstown, 1 City
Sat Feb 03	6 calls-medical: 2 City, 3 Wmstown, 1 Vlg
Sun Feb 04	2 calls-medical: 1 Wmstown, **1 Locke**
Mon Feb 05	1 calls-medical: 1 Wmstown
Tues Feb 06	1 calls-medical: 1 Vlg
Wed Feb 07	9 calls–medical: 2 Leroy, 4 City, **1 Locke-vehicle accident,** 2 Wmstown
Thurs Feb 08	6 calls–medical: 1 Whtfld,2 City,1 Leroy,1 mutual aid Dansville,1 mutual aid Okemos-fire
Fri Feb 09	8 calls–medical: 3 City, 1 Whtfld, 1 Vlg, 2 Wmstown, 1 mutual aid Holt-fire
Sat Feb 10	1 calls–medical: **1 Locke**
Sun Feb 11	3 calls-- medical: 1 Wmstown, 1 City, 1 Leroy
Mon Feb 12	5 calls– medical: 2 City, **1 Locke,** 1 Wmstown, 1 Leroy
Tues Feb 13	1 calls– medical: **1 Locke-citizen assist**
Wed Feb 14	3 calls -medical: 1 Vlg, 1 City, 1 Whtfld-vehicle accident
Thurs Feb 15	2 calls –medical: 1 Vlg, 1 City
Fri Feb 16	7 calls - medical: 5 City, 1 Leroy-vehicle accident, 1 mutual aid Okemos
Sat Feb 17	1 calls - medical: 1 City
Sun Feb 18	6 calls - medical: 1 Whtfld, 2 Wmstown, 3 City-2 medical & 1 structure fire
Mon Feb 19	5 calls – medical: 1 Wmstown, 2 City, 1 Leroy, 1 mutual aid Okemos
Tues Feb 20	6 calls - medical: 2 City, 1 Leroy, 1 Wmstown, **1 Locke-citizen assist**, 1 Whtfld-utility
Wed Feb 21	9 calls - medical: 2 City, 1 Whtfld, **1 Locke,** 4 Wmstown w/1 fire response, 1 Vlg-fire
Thurs Feb 22	7 calls - medical: 4 City, 1 Whtfld, 2 mutual aid-Stockbridge
Fri Feb 23	9 calls - medical: 3 City, 1 Leroy, 2 Wmstown, 1 Whtfld, 1 mutual aid Dansville, 1 mutual aid Okemos-fire
Sat Feb 24	2 calls - medical: 1 mutual aid Stockbridge, 1 Whtfld-brush fire
Sun Feb 25	8 calls -medical: 2 Wmstown, 2 City, **1 Locke,** 1 Whtfld-brush fire, 2 Leroy
Mon Feb 26	3 calls -medical: 2 City, 1 mutual aid Fowlerville-brush fire
Tues Feb 27	3 calls –medical: 1 Whtfld, 2 Leroy w/1 brush fire
Wed Feb 28	4 calls – medical: 2 City, **2 Locke**
Thurs Feb 29	3 calls – medical: **1 Locke-vehicle accident,** 2 Wmstown

LOCKE TOWNSHIP ZONING ADMINISTRATOR, JULIE A. MOORE

February 2024 Zoning Administrator report

Land Use Permits issued

2024 LU 02	Nick Luft	5695 M-52 Perry 48872	09-300-020

phone/meetings/site visits

02-01-24
Opened emails.
Rec'd Mech. Permit 24-003, 5301 Horstman Rd, Mark McChesney, 17-200-027 & documented/filed.
Rec'd Plumb. Permit 24-002, 3092 Moyer Rd, Ryan Riley 29-100-009, Drafted refund letter of 12.00 for overpayment from East End Plumbing, gave to letter to clerk.
Rec'd Bldg. Permit App. for Ryan & Emily Riley @ 3092 Moyer Road 29-100-009. Emailed Ben Pankow advising signature is required on the LOT DIAGRAM form before forwarding to AGS.
Rec'd check 21122 $247 from Jack Palmer for Bldg. Permit 24-001. Emailed AGS. Documented payment. Gave check to clerk.

02-06-24
Opened emails.
Created and filed Bldg. Permit 24-001 6300 Corey Rd, Perry- David Carroll.
Checked if 5300 Corey address was available for George Steele Jr. for his property adjacent to 14-200-003, can not use 5300 number.
Reviewed Renewable Energy literature.

02-08-24
Opened emails.
Deleted old scanned bldg. permits
Checked 2022, 2023 Bldg permits for new dwellings and to see if they had PRE.
Accepted tax payments.

02-13-24
Opened emails.
TCF Cindy Prossen (517) 410-8063 requesting copy of deeds for 11-400-017 + 11-400-016. Checked assessor's files no deeds found. Advised caller to contact Ing. Register of Deeds.
Rec'd TCF Lina Chapman 2659 Donna Dr. re: adjacent lot to 31-451-007 which she owns in R2 District and wanting to know set backs for pole barn. Advised front yard set back is 40' & max. Ht. 20'. Advised to complete Bldg. Permit – Accessory Bldg. packet.
TCF Lorna @ H&R Block (517) 655-8485, requesting Winter Tax bill for Martha Boehm be emailed to Lorna.Obrien@tax.HRBlock.com. Emailed sent.
Refund letter of 30.00 to Heat N Sweep for overpayment of mech. permit 24-003 17-200-027 McChesney. Gave to clerk.

02-15-24
Opened emails.

Rec'd email from Lina Chapman regarding vacant parcel 31-451-009 & ordinance regarding building a pole barn. Replied to goodchapman@gmail.com.
Set up voting tables.

02-20-24
Opened emails.
Rec'd AGS report criteria receipt from 1-16-24 to 2-15-14, reconciled with 2024 Building Permit list & gave to Supervisor. Copy for records.
Rec'd 5353 Herrington plumbing re-inspections (2) each, $48.00 for 13-200-022, Merritt – documented on bldg. permits list and filed.
Worked on address assignment for parcel 09-300-020, waiting for driveway permit and contractor info. & construction plans before assignment of address and issuance of building permit application.

02-22-24
Opened emails.
Rec'd construction plans for 09-300-020 pole barn, Nick Lutz. Scanned and sent Soil Erosion permit waiver, sedimentation control waiver & site plan to ICDC, J. Lynn.
Issued LU 002 Permit & emailed to Nick Lutz. Documented on LU Permit List.
Emailed N. Lutz that we are still waiting for ICRC to issue a driveway permit before we can submit Bldg. Permit app to AGS.

02-27-24
Opened emails.
Rec'd residential Elec. Permit App & Mech. Permit App. for 4309 Harris Rd, 30-200-015, Palmatier Adam & Ronda & payment of 96.00 #89386 from Apcom Elec. & power systems. Emailed apps. to AGS. Documented on 024 Building Permit List.
Rec'd Zoning Adm. Michigan Assoc. Planning book & conf. of training workshop in March.
Rec'd Elec. Permit 24-002 from AGS & Mech. Permit 24-004 from AGS for 4309 Harris Rd, 30-200-15, Palmatier. Filed.

02-29-24
Opened emails.
Rec'd TCF Bob Perialas (517) 331-6828 re: 5200 M-52, parcel 16-400-013 inquiring if an RV park could be built. Advised – RV park is NOT listed on Table 10-3 as permitted use in Commercial District. Caller then wanted to know if this parcel could be re-zoned or granted a variance. Emailed caller Table 10-3 and Zoning Ordinance Amendment application along with Article 7 outlining ZO Amendments to bperialas@thelocalelement.com.
Advised assessor that parcel 16-400-013 in the Equalization.Net program is incorrectly zoned as A-1 and needed to be changed to B-1.
Printed off Building Permits List and Feb. Zoning Adm. Report & gave to supervisor.
Emailed AGS inquiring is Bldg. Permit 23-002 for parcel 33-400-013, pole barn to be built, is still valid.
Sent letter to Alex Vanwert advising Bldg. Permit 23-095BR002 is expired. Advised a new building permit will need to be submitted should construction of pole barn be continued.

2024 LOCKE TOWNSHIP BUILDING PERMITS

Dec/Jan☒ Jan/Feb# Feb/Mar🔔 Mar/Apr+ Apr/May 🗁
May/Jun^ Jun/Jul☺ Jul/Aug% Aug/Sep☼ Sep/Oct♥ Oct/Nov@ Nov/Dec♣

JAN

Caroll, David & Eliz.	24-001	6300 Corey Rd	48872	02 200 008	pd. $247	Res. Glassed in porch#

2024 Locke Twp-plumbing/mechanical/electrical permits

01-02-24 Shanks, Kathy	23-021	4295 Rowley Rd	48895	34 200 011	pd. $48	mech
01-09-24 Hill, Brenda	24-001	3653 Rowley Rd	48895	33 100 008	pd $150(ref 102)	mech
01-23-23 Woelmer, Fred	24-002	3854 Rowley Rd	48895	33 400 008	pd $48	mech#
01-30-24 McChesney, Mark	24-003	5301 Horstman	48895	17 200 027	pd $78(ref 30)	mech#
02-27-24 Palmatier, Adam	24-004	4309 Harris Rd	48895	30 200 015	pd $48 (98 for 2)	mech #

01-18-23 McKenzie, Rob	24-001	4437 Webberville	48892	27 200 015	pd $48	plumb.#
01-30-24 Riley, Ryan	24-002	3093 Moyer Rd	48895	29 100 009	pd $60(ref 12.)	plumb.#
02-19-24 Merritt, Kyle	23-095	5353 Herrington	48892	13 200 022	pd. 48 (rein.)	plumb
02-19-24 Merritt, Kyle	23-095	5353 Herrington	48892	13 200 022	pd. 48 (rein)	plumb

01-25-04 Bloom, Justin	24-001	5350 Bell Oak Rd	48892	24 200 001	pd 48	elec
02-27-24 Palmatier, Adam	24-002	4309 Harris Rd	48895	30 200 015	pd 48	Elec.